THIS DOCUMENT IS THE PROPERTY OF [redacted] AND IS CONSIDERED COMPANY CONFIDENTIAL. THE REPRODUCTION OR USE OF INFORMATION HEREIN, ALL OR IN PART, IS EXPRESSLY PROHIBITED WITHOUT WRITTEN CONFIRMATION FROM A PRINCIPAL MEMBER OF MANAGEMENT AT [redacted]-CORP.

REV.	DESCRIPTION	DATE	APPROVED
1	INITIAL RELEASE	7/30/12	KN

1. MATERIAL:
   90056614-01: AL A380
   90056614, 90056618: MAKE FROM 90056614-01
2. FINISH:
   90056614-01: NONE
   90056614, 90056618: BLACK POWDER COAT WITH [redacted] P/N 16644-04
   MINI-TEX BLACK, CLASS RP, PER [redacted] STD 99001.
3. 0.5° DRAFT PERMISSIBLE UNLESS INDICATED OTHERWISE.
4. R.005 ON ALL SHARP EDGES UNLESS INDICATED OTHERWISE.
5. IMPRINT [redacted] LOGO .02" DEEP.
6. PLUG HOLES BEFORE PLATING

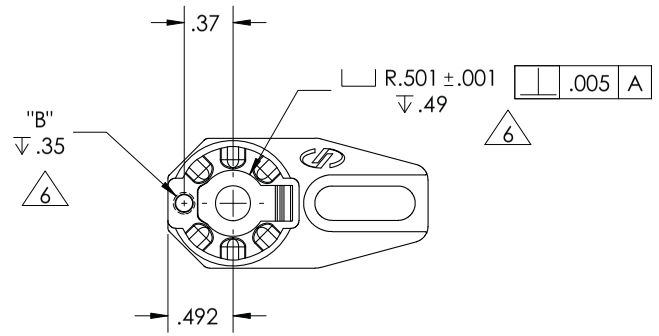

6

PART NUMBER	DESCRIPTION	DIM A	DIM B
90056614	POST HOLDER, CAST, 1IN	.250-20 UNC-2B	.164-32 UNC-2B
90056618	POST HOLDER, CAST, 1IN, M	M6 X 1.0	M4 X 0.7

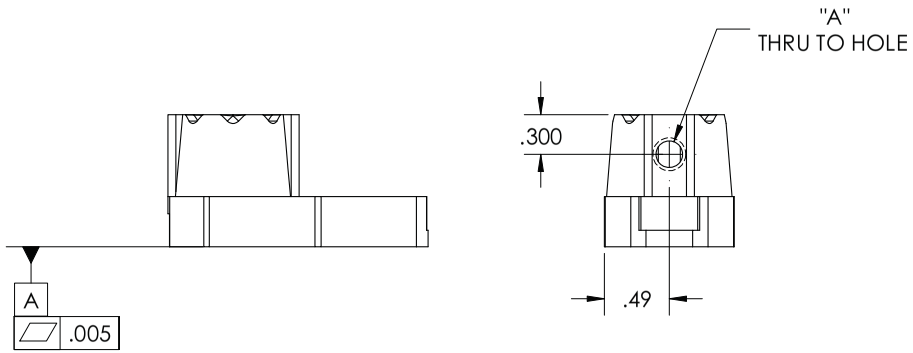

DRW NO. 90056614 REV. 1 Sheet1 OF 2

COSMETIC APPEARANCE IS AS IMPORTANT AS FUNCTION TO [redacted]-CORP. UNIFORMITY OF FINISH AND CONSISTENCY OF MACHINE TOOL MARKINGS ARE CRITERIA FOR ACCEPTANCE OR REJECTION OF PARTS OF EQUAL IMPORTANCE TO PHYSICAL DIMENSIONS.

THIRD ANGLE PROJECTION

INTERPRET DRAWING PER ANSI/ASME Y14.5M-1994
ALL MACHINED SURFACES ARE TO BE FREE FROM MILL SCALE, SCRATCHES, DENTS, STEPS, OR FLAWS EXCEEDING 63 MICROINCHES IN DEPTH. PROCESSES SUCH AS VAPOR HONING,, TUMBLE DEBURRING, BEAD BLASTING, OR SAND BLASTING UNLESS SPECIFICALLY CALLED OUT ON THE DRAWING ARE NOT TO BE USED WITHOUT EXPRESS AUTHORIZATION FROM [redacted] ENGINEERING DEPT.

SEE ENGINEERING RECORDS FOR COMPLETE APPLICATION DATA

NEXT ASSY	USED ON	MODEL NO
TBD	90052	MULTI

APPLICATION

UNLESS OTHERWISE SPECIFIED DIMENSION TOLERANCES ARE:
DECIMAL: .X ±.02, .XX ±.01, .XXX ±.005, .XXXX ±.0005
INCHES
ANGLES ±0.5°
√ 63 µINCH

MATERIAL 1
FINISH 2

DO NOT SCALE DRAWING

PROJECT NUMBER: Templates

APPROVALS		DATE
DRAWN	K.NGUYEN	7/30/12
CHECKED	R.SEBASTIAN	7/30/12
RESP ENG	K.NGUYEN	7/30/12
APPROVED	K.NGUYEN	7/30/12

[redacted]
1791 DEERE AVE.
IRVINE, CA 92606-4814
Tel 949 863-3144 FAX 949 253-1800
Experience : Solutions www.newport.com

POST HOLDER, CAST, 1IN

SIZE	CAGE CODE OR ECON	DWG NO.	REV
B	EAR99	90056614	1

SCALE 2:1 | MODEL FILE NAME 90056614 POST HOLDER, CAST, 1IN | Sheet1 OF 2

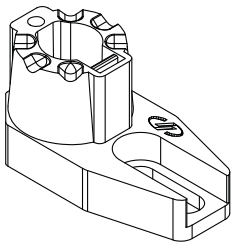

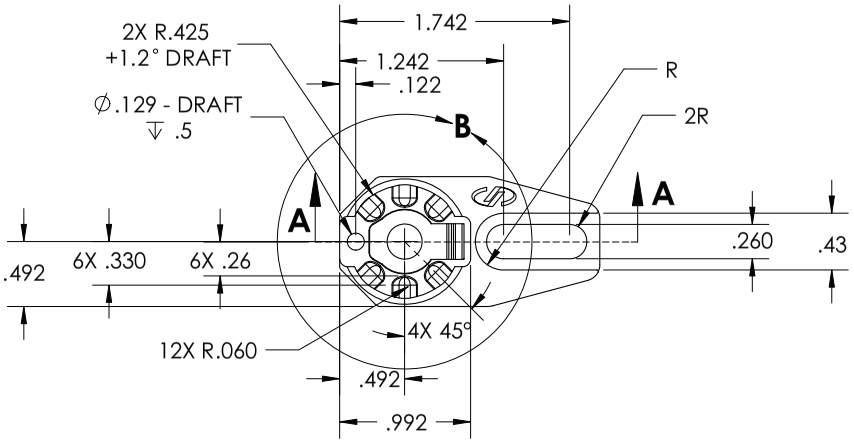

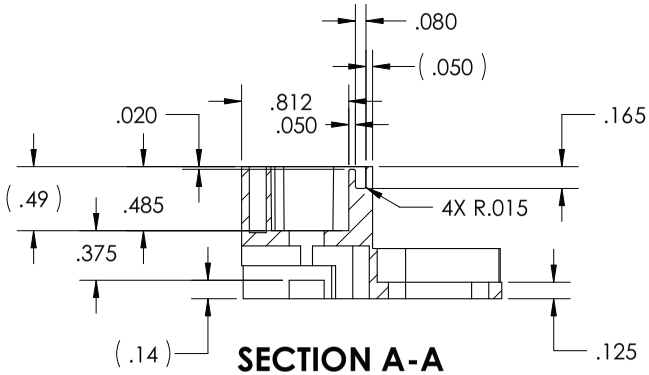

SECTION A-A
SCALE 1 : 1

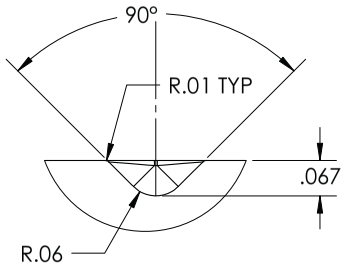

DETAIL C
SCALE 4 : 1
(6) PLCS

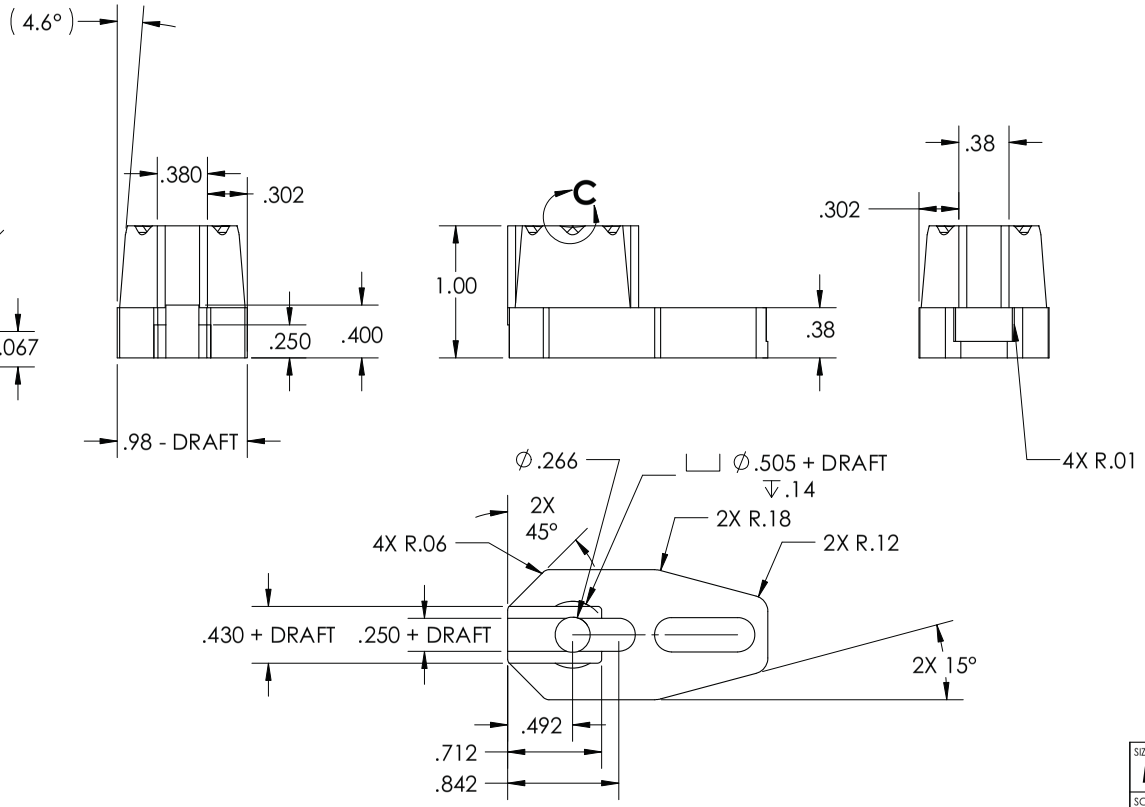

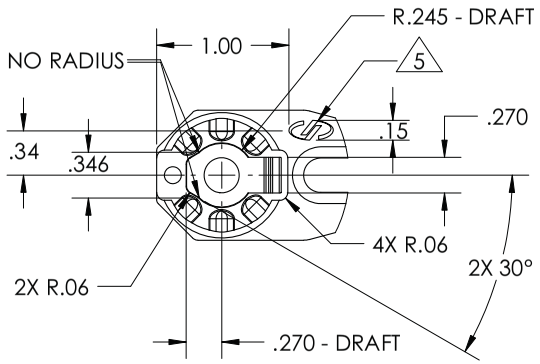

DETAIL B
SCALE 1 : 1

90052034-01

SIZE	CAGE CODE OR ECCN	DWG NO.	REV
B	EAR99	90056614	1
SCALE 2:1	MODEL FILE NAME 90056614 POST HOLDER, CAST, 1IN		Sheet2 OF 2